3/8-24 UNF SS 304 MAGNETIC PICK-UP SENSOR

Precision Electrodynamics | Engineered for reliable non-contact speed sensing

Designed for demanding industrial environments, the 3/8-24 UNF SS 304 Magnetic Pick-Up Sensor provides reliable rotational speed detection for engines, transmissions, and other rotating machinery. Its passive Variable Reluctance Speed (VRS) technology enables operation without an external power supply.
The sensor uses an integrated magnetic assembly and coil to generate an electrical signal in response to the movement of ferrous targets. As gear teeth pass the sensing tip, the changing magnetic conditions produce an alternating voltage output. The signal frequency corresponds to rotational speed, while its amplitude varies with operating conditions. Featuring a robust 304 stainless steel body and a threaded mounting configuration, the sensor is suitable for integration into compatible heavy-duty vehicles, generators, and industrial equipment. It supports engine speed monitoring, timing applications, and rotational feedback for control and protection systems.

PRODUCT AT A GLANCE

THREAD	SIGNAL	OPERATING TEMP.
3/8-24 UNF	**30 V PP minimum**	**−40°C to +107°C**

KEY PRODUCT INFORMATION

- SS 304 body with metallic finish.
- 30 V PP minimum signal under the stated test condition.
- Operating temperature range of −40°C to +107°C.
- Flying leads.
- Customised connectors are optional.

DIMENSION AND CONFIGURATION

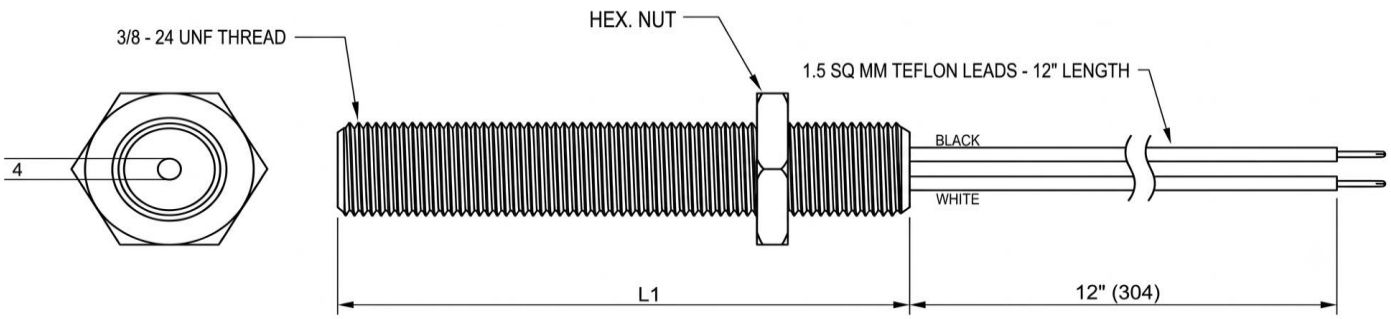

TECHNICAL SPECIFICATIONS

PARAMETER	SPECIFICATION
Thread specification	3/8-24 UNF
Signal amplitude	Tested with 60-tooth gear, 1 mm air gap, 1000 RPM; signal 7 V PP minimum
Polarity	Black positive with respect to white on approach of a ferrous target
High-pot test	500 Vrms (lead wire to case)
Sensing configuration	N-pole facing sensing gear
Operating conditions	-40°C to +107°C; resistant to moisture, gases, petroleum lubricants and fuels, salts, mild acids and alkalis
Pick-up connector	No connector; cable only (flying leads)
Case material	Stainless steel 304 grade
Leads	0.6 sq. mm Teflon leads, 12 in. (304 mm) Teflon flying leads, two core cable or braided cable
Potting material	Elantas insulating Debofil 60 + Hardener 758

APPLICATIONS

- **Engine RPM monitoring** – Measures crankshaft or flywheel speed in diesel and gas engines.
- **Generator speed sensing** – Provides reliable RPM feedback for generator control and protection systems.
- **Gearbox speed measurement** – Detects rotational speed of gears and shafts.
- **Turbine & rotating machinery monitoring** – Measures shaft speed for performance and condition monitoring.
- **Speed control & protection systems** – Provides pulse signals for governors, tachometers, overspeed protection, and control systems.

CUSTOMIZATION

Customized connectors are available / optional as specified in the supplied product documentation. Harness length and connector configuration can be customer-specific where indicated.

OPERATING PRINCIPLE

01 TARGET APPROACHES

A ferrous gear tooth approaches the sensor's sensing area.

02 FLUX CHANGES

The moving target changes the magnetic flux around the internal coil.

03 AC SIGNAL

The changing flux induces an AC voltage at the output terminals.

NOMENCLATURE : 3/8-24 UNF MAGNETIC PICKUP SENSOR

P M 3 A 2 I 1 CO

Make
- **P** PED

Sensor type
- **M** MPU
- **H** Hall Sensor

Thread length
- **2** 2-2.99"(50.8-75.9mm)
- **3** 3-3.99"(76.2-101.3mm)

Thread size
- **A** 3/8-24 UNF

Material
- **1** SS 304

Connector type
- **AT** Automotive connector
- **PC** Packard connector
- **PM** Packard + mating connector
- **CO** Cable only

Cable Type
- **1** 1 ft Flying leads
- **2** 3 ft Flying leads
- **3** 1 ft Two-core cable
- **4** 3 ft Two-core cable
- **5** 6 ft Two-core cable
- **6** 1 ft Braided cable
- **7** 3 ft Braided cable
- **8** 6 ft Braided cable
- **9** 15 ft Braided cable

Resistance
- **F** 901-1200Ω / 1000 Ω
- **G** 1201-1700Ω / 1500 Ω
- **H** 1701-2200Ω / 2000 Ω
- **I** 2201-2500Ω / 2400 Ω
- **J** 2501-2800Ω / 2700 Ω
- **K** 2801-3100Ω / 3000 Ω

Order Guide

1 - Make	PED
2 - Sensor type	M=MPU, H = Hall effect sensor
3 - Thread length	2 to 3 (Refer Thread length table)
4 - Thread size	A 3/8-24 UNF (Refer Thread size table)
5 - Material	1 SS 304
6 - Resistance range	F to K (Refer Resistance table)
7 - Cable type	1 to 9 (Refer Cable type table)
8 - Connector type	AT/PC/PM/CO (Connector type)

Sample part number : **P M 3 A 1 I 1 CO**

Description : PED make magnetic pickup 3-3.99" thread length, 3/8-24UNF, SS 304, 2400 Ohms, with Cable Only.

Note:
Always specify the complete part number when placing order. All dimensions are in inches unless specified. Customised sensors will be manufactured as per requirement.
Please contact- info@precisionelectrodynamics.com for technical specification and clarification